Atmore 500mm 2 Door Wall Unit - Short Projection

MY STYLE

RANGE	Atmore
CODE(S)	MSFAT50WMWH MSFAT50WMGR MSFAT50BA
SIZE (mm)	H 650 x W 490 x D 280 inc. Basin
FINISH	Matt/Gloss
BASIN MATERIAL	Ceramic
TAP HOLE(S)	One
NET WEIGHT	Unit: 11.8 Kg , Basin: 7.9 Kg
ADDITIONAL INFORMATION	• Compatible with 500mm 1th Ceramic Basin- Short Projection • No Overflow, needs Unslotted Waste

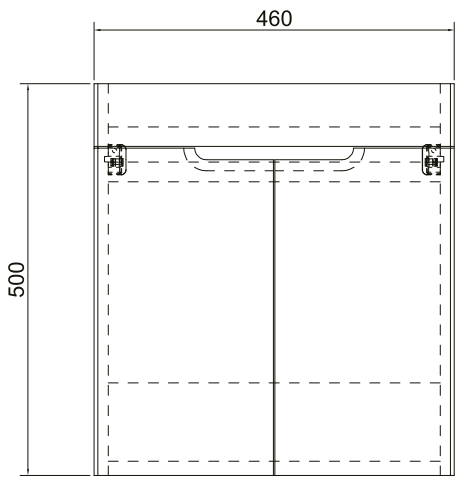

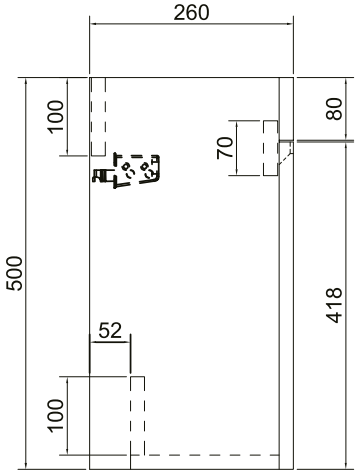

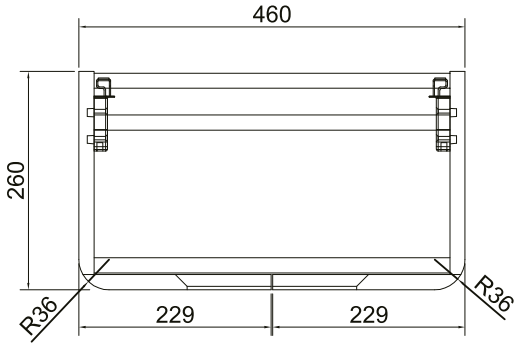

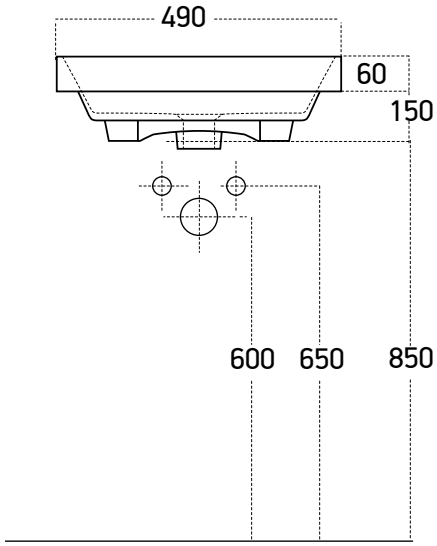

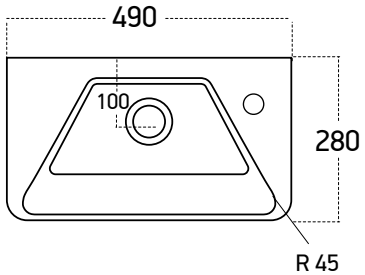

COLOUR OPTIONS:

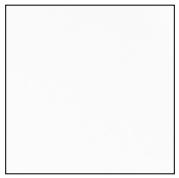

White Gloss

Grey Matt

The information contained on this page was correct at date of issue. Fitting dimensions are provided as a guide only. Some variation may occur due to manufacturing tolerances. We pursue a policy of continuing improvement in design and performance of our products and so reserve the right to change specifications without prior notice.